Temposonics®

Absolute, Non-Contact Position Sensors

MTS® SENSORS

C-Series
Core Sensor

Temposonics® C-Series
Measuring length 72 - 250 mm

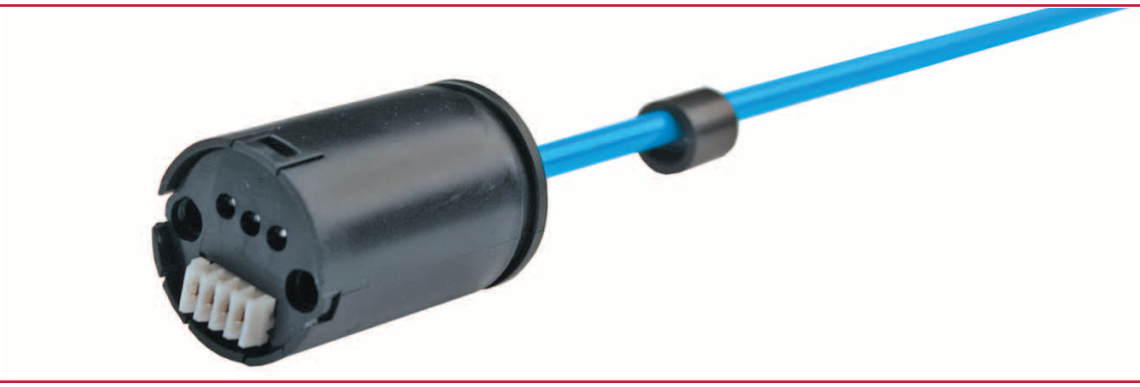

- **Non-contact - No wear, such as found with pot wipers on conductive mylar, particularly when mounted on dithered actuators**
- **Light Weight - Ideal for small portable OEM products**
- **Low Cost - Total Cost Competitive* with linear pots or LVDT's**
- **Short Operating Space - Half the space needed compared to LVDTs or rod and cylinder pots**
- **Small Size - This smallest package in the market that has all the bene-fits of magnetostrictive sensing yet fits where no other can**
- **Low Power Needs - Allows use with printed circuit-level supplies of 5 VDC**
- **No Drift - No periodic re-calibration needed**
- **Optional Supply Voltages - Allows use in 5 or 12-volt systems**
- **Optional Housings - Allows exposed use by offering mounting options and several levels of environmental protection**
- **Optional Magnets - Other magnet configurations allow greater range of installation choices**
- **Customizable Active Zones - Offers full output sensitivity for smaller active zones**
- **Customizable Reading Direction - Forward or Reverse acting analogue output allows match to control requirements**

Applications	Markets
OEM products needing embedded or externally mounted continuous position or liquid level information.	Medical treatment equipment and mobility devices, a wide range of tools, entertainment automatons, marine steering and trim, HVAC, food preparation equipment, exercise equipment, off-road equipment, and any high volume market needing low cost, small, embeddable position sensing.

CE ISO 9001 CERTIFIED

C-Series Product Line

The C-Series modular sensor line was created to support industrial, medical and consumer product OEMs who recognize the benefits of magnetostrictive position sensing technology but didn't have a product solution that could be tailored to their high volume but low-cost driven sensing needs. This line is a more reliable, no wear measurement system compared to traditional alternatives such as pots and lvdt's. No other magnetostrictive sensor manufacturer can offer such a small, embeddable or externally mountable, yet highly malleable sensor at high volume pricing that is attractive for high volume OEM products.
The C-Series Core Sensor is the common sensor for all C-Series models.
C-Series additional protective housings and accessories can be added to this Core Sensor.

The Core Sensor

The Core Sensor is a complete, functional sensor in every respect making it ideal for embedded sensor applications where the OEM product provides all the environmental protection necessary for the application and any additional sensor protective housing would be redundant, representing unnecessary cost in extremely cost sensitive moderate to high volume OEM products. There are two models, the CS and CM. The CS is designed for general purpose applications and requires 5 volt power supply. The CM is designed specifically for mobile equipment applications by including additional protection from over voltage and reverse connection and requiring a 12 or 24 volt supply. Connection is made via a four-pin, JST PHR-4 model mating connector for use with 24 AWG wire in MTS provided cables or discrete wire pigtails. The connection is also compatible with the JST KRD 04-KR-06 installation displacement 26 AWG Connector.

Other Views

C-Series Core Sensor Bottom View

C-Series Core Sensor Bottom View

CS Connector PIN Designations 24 AWG

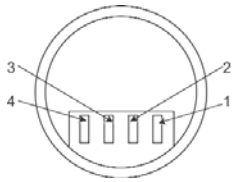

Wiring Pin Designations

Pin	Color Convention (Optional wire/cable)	Signal
1	White	Common
2	Green	Voltage Output
3	Brown	Supply Voltage (+)
4	Green	PWM Output

Technical Data

Output:

Analogue:	Type CS 0.1 to 4.9 VDC 5 Vdc supply, ratiometric with V supply
	Type CM 0.1 to 4.9 VDC, fixed output 12 VDC supply ± 25%; forward acting (Contact MTS about customized reverse acting or redefined active zones)
PWM (Pulse Width Modulate Signal)	Active high
	Signal level: High >60% Vs, inactive low at <30% Vs / Position = PWM high period x Waveguide Sonic Velocity - Offset (37,8 mm)
	Median Velocity 2794 m/s (delivery range 2702 to 2890 m/s). Real velocity is printed on each senor rod.

Update frequency:
2.6 KHz (385 microseconds period).

Active strokes available:
72.3, 109.5, 128.3, 148.0,162.3, 186.3,194.3, 217.3 and 250.1mm

Non-linearity:
± 0.15 mm without correction, using a 401842 magnet measured between 5% and 95% of active stroke.

Repeatability:
± 25 µm

Hysteresis:
± 25 µm

Operating temperature:
-40°C to +75°C

Supply requirements:
CS: 5 VDC -5%,+10%; CM: 12 Vdc ± 25%

Current consumption:
40 mA

Mounting:
2 x M3 screws

Temperature drift:
Voltage ± 20 µm/°C, PWM ± 10 micron/°C

Output load:
Analogue: 10kΩ, PWM: 400kΩ

Standard magnet:
401842 (float and other magnets optional)

Package rating:
IP50/IP40

Zero tolerance:
± 1.0 mm

RF emissions and immunity:
Contact MTS

Mating connector:
JST PHR-4 socket female (24 AWG) crimp pin
JST 04KR-D6S (26 AWG) insulation displacement

Protective housing IP67
H2: Material 1.4404 / 316L

Dimensions

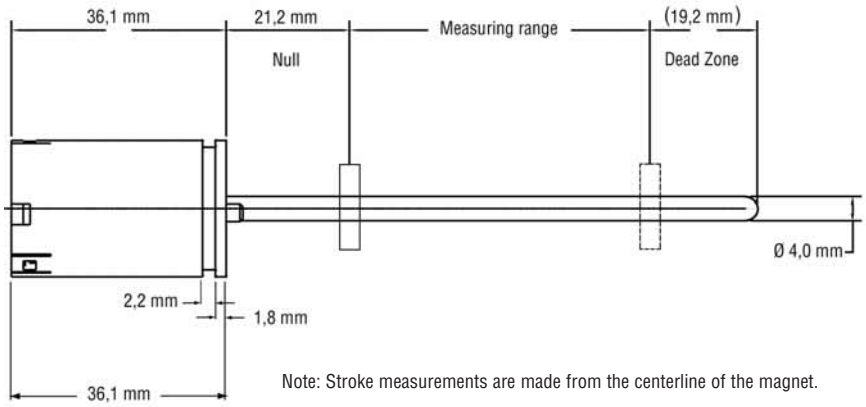

Note: Stroke measurements are made from the centerline of the magnet.

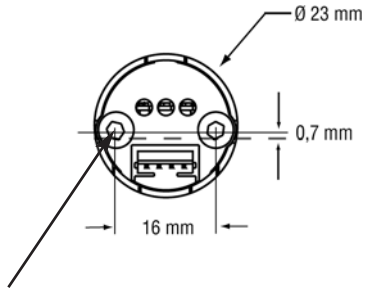

M3 X 37 DIN 7500 1.4567 (Part no. 561106, see Accessories)

Temposonics® C-Serie - Basis sensor with IP67 standard housing H2

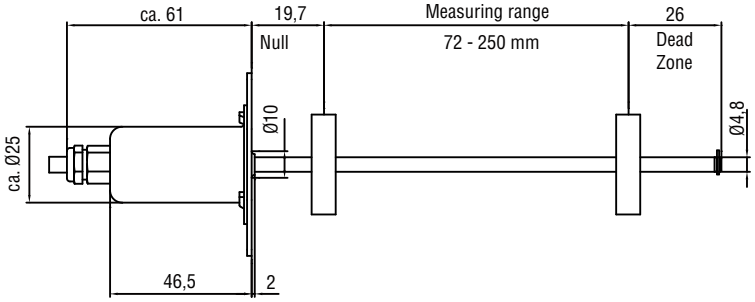

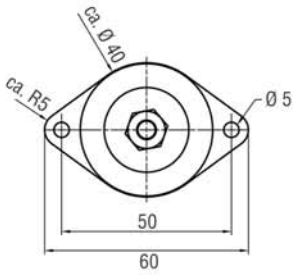

Magnets and Floats

Ring Magnets

Description	Part No.	I.D.	O.D.	Thickness
6 mm standard ring magnet	401842	6.5 mm	9 mm	9 mm
19,3 mm optional ring magnet	400424	19,3 mm	28 mm	4,9 mm

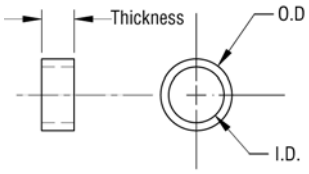

See "Technical Note 551056" for magnet installation

Specialty Magnets

Description	Part No.	O.D.	Spacing to Sensor C/L	Thickness
Button magnet	253619	9 mm	8 mm +/- 2 mm	6 mm

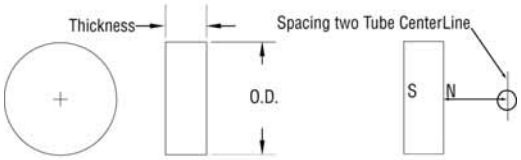

Float Kit

Description	Part No.	O.D.	I.D.	Depth
Float 1	201611	28.6 mm	9.5 mm	30 mm
Float 2	201656	22 mm	6 mm	32 mm

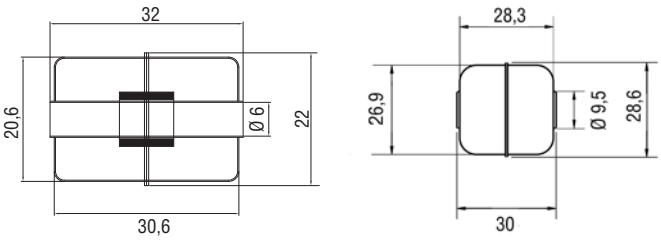

Temposonics® C

Sensor Model
C-Series Sensor

Standard or mobile supply
S = 5 Vdc Standard Input
M = 12Vdc

Stroke length
072 = 72.3mm
109 = 109.5mm
128 = 128.3mm
148 = 148.0mm
162 = 162.3mm
186 = 186.3mm
194 = 194.3mm
217 = 217.3mm
250 = 250.1mm

Connection options
A = JST PHR-4 Connector

Output
V = Analogue Voltage
D = PWM

IP 67 housing (options)
Blank = No housing; core sensor only.
H2 = Standard IP67 two-hole flange housing, incl. 1m connecting cable without connector

How to Order - Required

1. ORDER PART NUMBER FOR SENSOR with or without IP67 housing.
2. ORDER appropriate magnet or float (one per sensor)

How to Order - Options

3. ORDER mating connector or cable assemblies as needed.
4. IP67 housing component kits are available for those wishing to purchase housings as separate line items.

Magnet and Float Options (one required per sensor)

Description	Function/Notes	Part No.
6 mm ring magnet	standard	401842
19,3 mm optional ring magnet	For applications requiring a magnet with more clearance	400424
Button magnet	For applications that cannot use a ring or bar magnet (note operating clearance limits)	253619
Float 1	Standard float with magnet	201611
Float 2	Standard float with magnet	201656

Mating Connector & Cable Assembly Options

Description	Function/Notes	Part No.
JST KRD connector only	Insulation displacement mating connector only	370500
JST PHR-4 connector & cable	(Analogue) Mating connector with 1 meter cable	253396-1000
JST PHR-4 connector & cable	(PWM) Mating connector with 1 meter cable	253398-1000

IP67 Housing Component Kits

Description	Function/Notes	Part No.
Cover kit H2	Electronics housing, strain relief, O-Ring	253525
Flange and pipe kit H2	2-hole flange/pipe assemble order with -XXX	253526 -XXX = 072 - 250 Stroke length
Screw	M3 X 37 DIN 7500 (Two required for each sensor)	561106

www.mtssensor.de
www.temposonics-shop.de
Service Hotline: 01805 - mtssensor

© MTS Temposonics® C-Series Temposonics® Core Sensor 23062009e - Alterations reserved

MTS® SENSORS

Germany
MTS Sensor Technologie
GmbH & Co. KG
Auf dem Schüffel 9
58513 Lüdenscheid, Germany
Tel.: +49-2351-9587-0
Fax: +49-2351-56491
info@mtssensor.de
www.mtssensor.de

USA
MTS Systems Corporation
Sensors Division
3001 Sheldon Drive
Cary, NC 27513, USA
Tel.: +1-919-677-0100
Fax: +1-919-677-0200
sensorsinfo@mts.com
www.mtssensors.com

Japan
MTS Sensors Technology Corp.
737 Aihara-cho,
Machida-shi
Tokyo 194-0211, Japan
Tel.: +81-42-775-3838
Fax: +81-42-775-5512
info@mtssensor.co.jp
www.mtssensor.co.jp